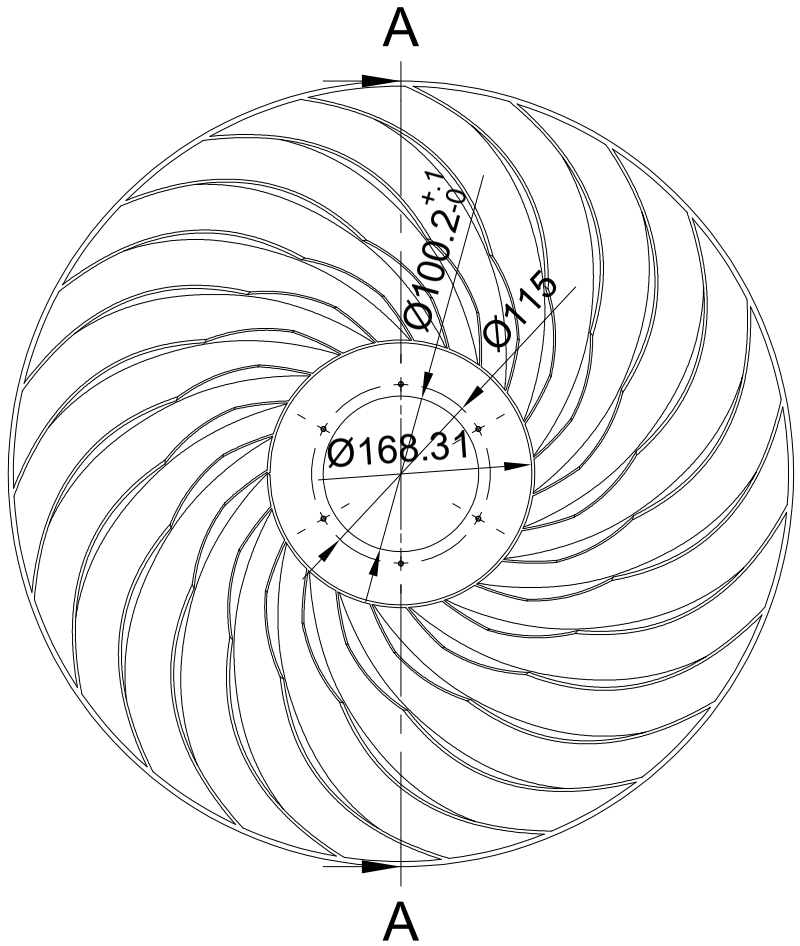

A-A (1:5)

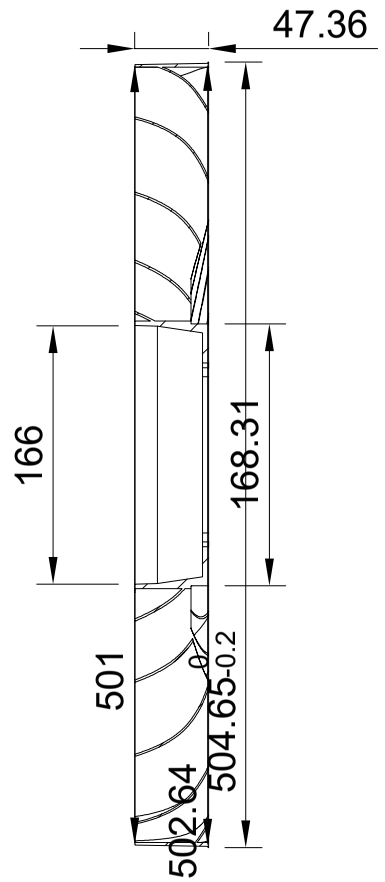

Dept.	Technical reference	Created by anthony douglas 2/23/2026	Approved by
		Document type	Document status
		Title feb19_BQF_moddingformoldability	DWG No.
			Rev. / Date of issue / Sheet 1/1